Flange Units (Oval)

NCFL2 (Normal-duty)

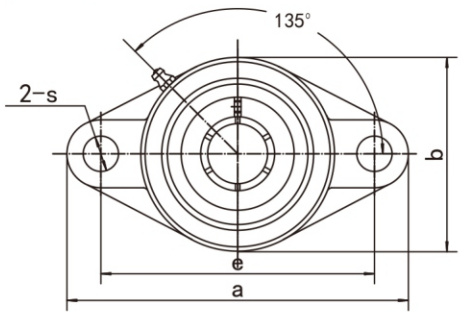

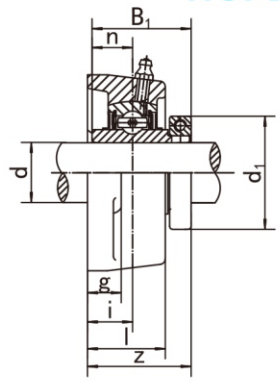

Unit NO.	Dimensions (mm / in.)												Bolt Size mm/in.	Bearing No.	Housing No.	Weight (kg)
	d	d1	a	e	i	g	l	s	b	z	B1	n				
NCFL204	20	44.5	113	90	15	11	25.5	12	60	34.8	32.5	33.4	M10	NC204	FL204	0.55
204-12	3/4	1-3/4	4-7/16	3-35/64	19/32	7/16	1	15/32	2-3/8	1-3/8	1.279	1.315	3/8	NC204-12		
NCFL205	25	49.2	130	99	16	13	27	16	68	38.2	36.5	14.3	M14	NC205	FL205	0.79
205-14	7/8													NC205-14		
205-15	15/16	1-15/16	5-1/8	3-57/64	5/8	1/2	1-1/16	5/8	2-11/16	1-1/2	1.437	0.563	1/2	NC205-15		
205-16	1													NC205-16		
NCFL206	30	55.6	148	117	18	13	31	16	80	41.8	39.7	15.9	M14	NC206	FL206	1.03
206-18	1-1/8													NC206-18		
206-19	1-3/16	2-3/16	5-13/16	4-39/64	45/64	1/2	1-7/32	5/8	3-5/32	1-21/32	1.563	0.626	1/2	NC206-19		
206-20	1-1/4													NC206-20		
NCFL207	35	65.1	161	130	19	14	34	16	90	46.0	44.5	17.5	M14	NC207	FL207	1.45
207-20	1-1/4	2-7/16												NC207-20		
207-22	1-3/8	2-9/16	6-11/32	5-1/8	3/4	35/64	1-11/32	5/8	3-35/64	1-13/16	1.752	0.740	1/2	NC207-22		
207-23	1-7/16													NC207-23		
NCFL208	40	68.3	175	144	21	14	36	16	100	52.8	50.8	19.0	M14	NC208	FL208	1.82
208-24	1-1/2	2-11/16	6-7/8	5-1/8	53/64	35/64	1-13/32	5/8	3-15/16	2-3/32	2	0.748	1/2	NC208-24		
NCFL209	45	74.6	188	148	22	15	38	19	108	53.8	50.8	19.0	M16	NC209	FL209	2.20
209-26	1-5/8	2-13/16												NC209-26		
209-27	1-11/16	2-15/16	7-15/32	5-53/64	55/64	19/32	1-1/2	3/4	4-1/4	2-1/8	2	0.748	5/8	NC209-27		
209-28	1-3/4													NC209-28		
NCFL210	50	85.7	197	157	22	15	40	19	115	56.1	53.1	19.0	M16	NC210	FL210	2.67
210-31	1-15/16	3-3/8	7-3/4	6-3/16	55/64	19/32	1-37/64	3/4	4-17/32	2-7/32	2.091	0.748	5/8	NC210-31		
210-32	2													NC210-32		
NCFL211	55	92.1	224	184	25	18	43	19	130	59.9	57.1	22.2	M16	NC211	FL211	3.30
211-32	2	1-1/2	8-13/16	7-1/4	63/64	23/32	1-11/16	3/4	5-1/8	2-11/32	2.248	0.874	5/8	NC211-32		
211-35	2-3/8	3-5/8												NC211-35		3.55
NCFL212	60	104.8	250	202	29	18	48	23	140	70.3	66.7	25.4	M20	NC212	FL212	4.46
212-36	2-1/4	4-1/16	9-27/32	7-61/64	1-9/64	23/32	1-7/8	29/32	5-1/2	2-25/32	2.626	1.000	3/4	NC212-36		
212-39	2-7/16	4-1/8												NC212-39		